Battery-Electric AGVs

Clean Air in Ports

Antwerp, October 8th 2013

AGV Container-Terminal

- Automated Guided Vehicles (AGV) are heavy duty vehicles for the automated transportation of containers within ports.
- AGVs are guided by a navigation and a fleet management system.
- High availability with up to 7 000 operating hours per year and vehicle, 24-7 operation.

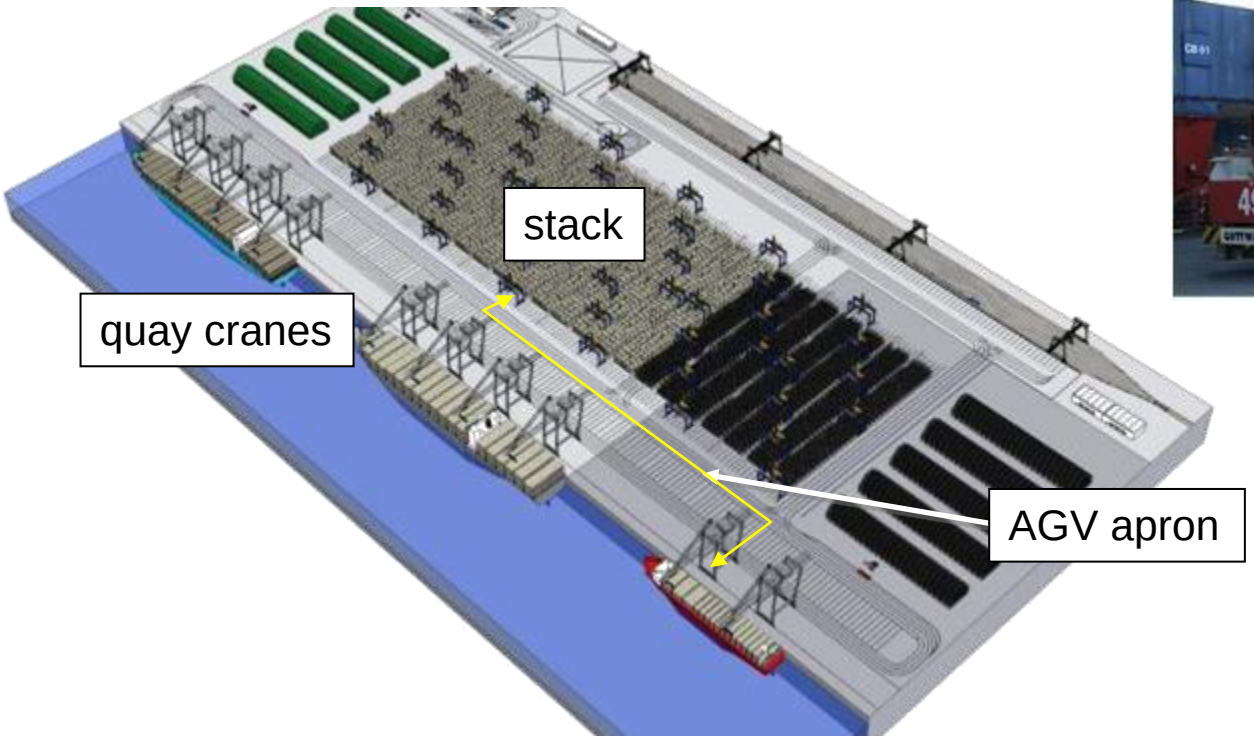

- Transport of containers with up to 40t (single lift) and 60t (twinlift 2x20') between quay cranes and container stacks.
- Average travel distance is approx. 800 m per move.

AGV Milestones

- 1988: diesel-hydraulic AGV (first prototype)
- 1991: diesel-hydraulic AGV (series-production)
- 2006: diesel-electric AGV (series-production)
- 2009:
  - first battery-electric AGV test-vehicle
  - batteries in container on AGV
  - successful feasibility study

Government-funded research project "Battery-AGV" to achieve implementation readiness.

Government-funded research project Battery-AGV

„Development of Battery Driven Container Transport Vehicles and Field Test at the Container Terminal Altenwerder in Hamburg“

- Development of two Battery-AGV prototype vehicles
- Development of a fully automated battery changing and charging station
- Long term field test of the Battery-AGVs under real operating conditions

- 01.06.2010 until 30.09.2011
- Funded by: Bundesministerium für Umwelt, Naturschutz und Reaktorsicherheit

Partners:

Public-funded research project B-AGV

- Battery concept

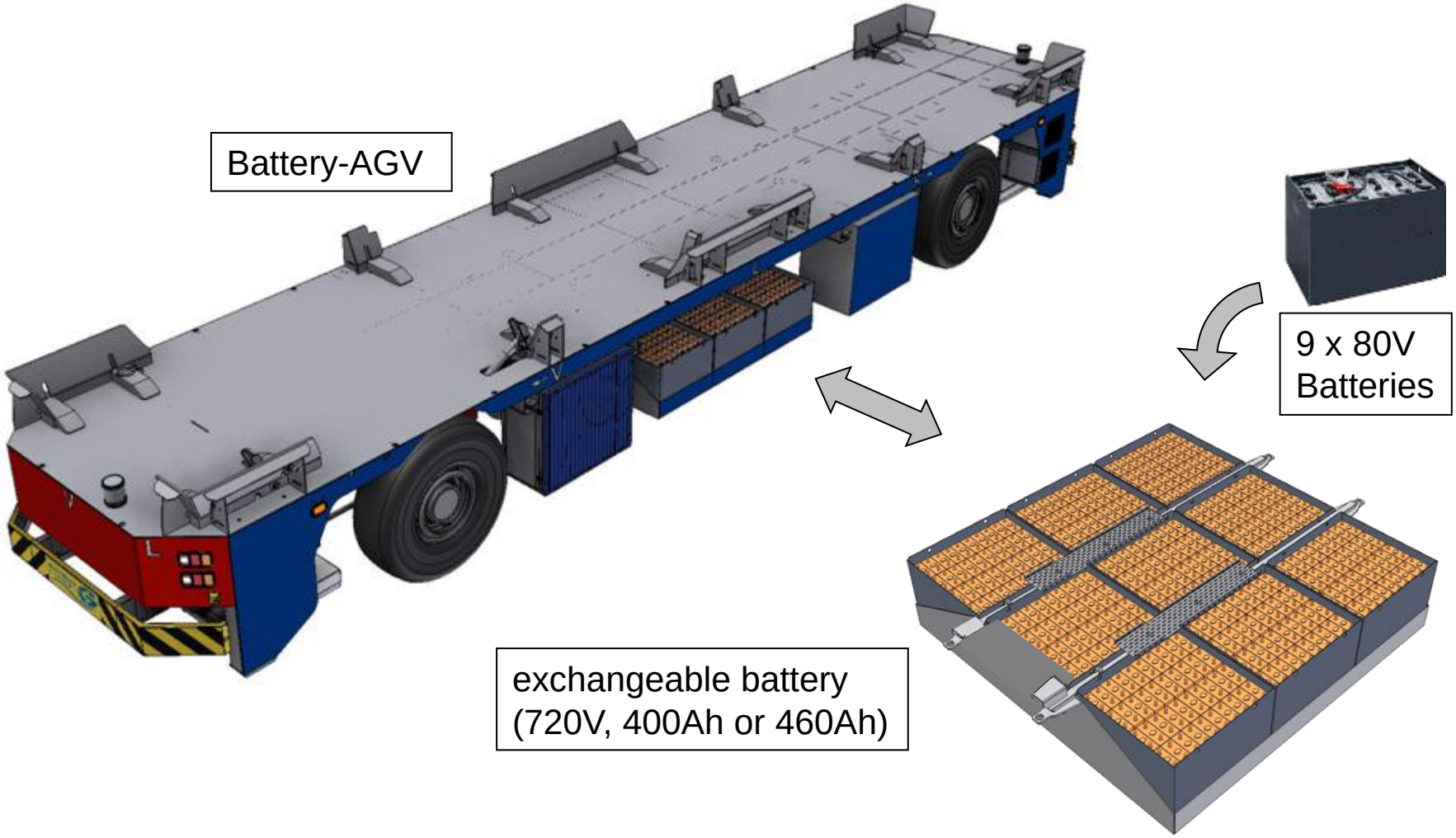

Public-funded research project B-AGV
Battery Exchange and Charging Station

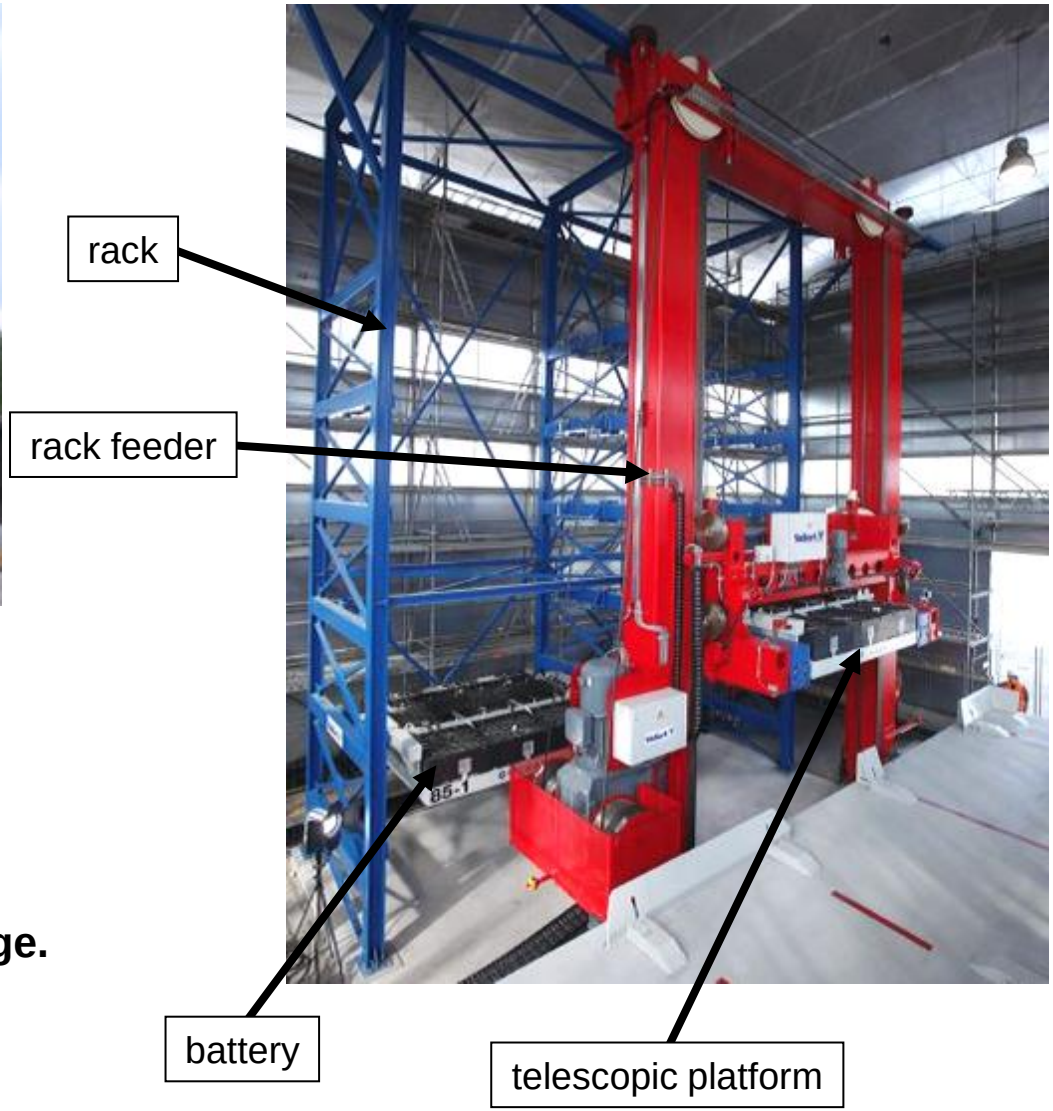

- Battery exchange & charging is fully automatic
- Decoupling of driving and charging.
- **No reduction of vehicle performance, only short downtime for battery change.**
- Station is integrated in existing software system.

Public-funded research project B-AGV

- Reconfiguration of powertrain

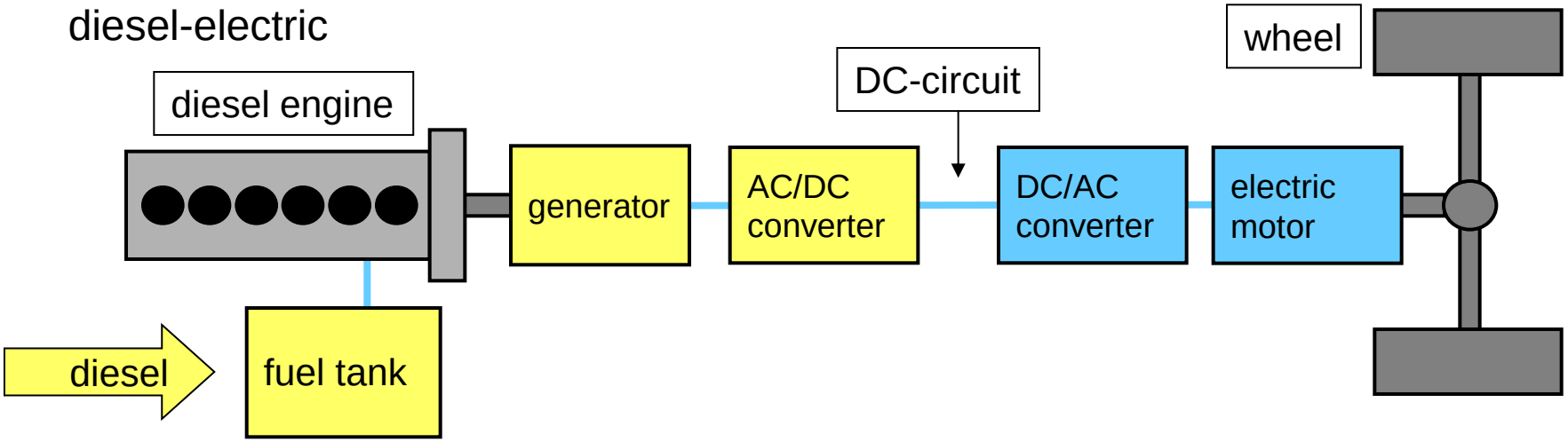

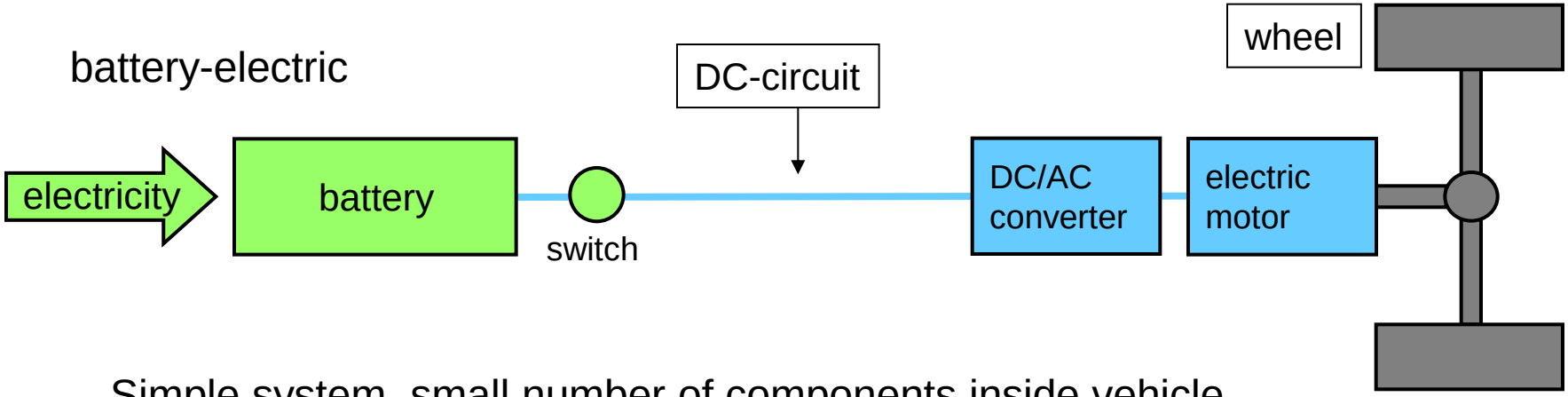

Simple system, small number of components inside vehicle

Public-funded research project B-AGV

- Efficiencies of diesel-electric and battery-electric powertrains

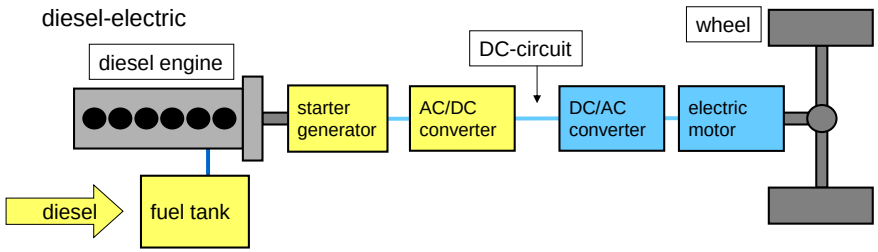

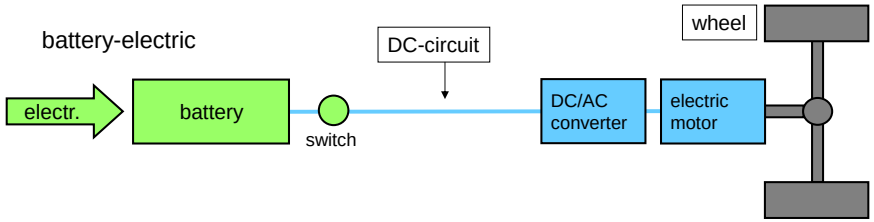

E-AGV (diesel-electric)

Efficiencies:

• Diesel motor (average)	35%
• Generator	92%
• Rectifier	97%
• Converter	97%
• Electric motor	93%
• Axle	92%
$\eta_{E\text{-}AGV}$	26%

Battery-AGV

Efficiencies:

• Battery incl. charger	75%
• Converter	97%
• Electric motor	93%
• Axle	92%
• Add. dead weight	90%
$\eta_{B\text{-}AGV}$	56%

- Additional energy savings of battery powered AGV during idling times!

Advantages:

- **No local emissions: Future increase of emission regulations can always be fulfilled.**
- **Reduced maintenance through omission of the diesel engine.**
- **Lower generation of noise.**
- No start up time of the diesel engine => productivity increase.
- Independent from energy source (fossil fuels, nuclear power, water power, wind power, solar power, …).
- Independent of crude oil and diesel price trends and availability.
- Reduced global emissions.

Public-funded research project B-AGV
Environmental Friendliness Global CO_2-Savings

TEREX Port Solutions

Diesel-Electric AGV:




23,2 kg CO_2 per operating hour

Diesel fuel inclusive fabrication and transportation, 3,13 kg CO_2/Liter*

AGV-drive 7,4 l / Oph

Battery-AGV:




11,7 kg CO_2 per operating hour

German energy mix 0,56 kg CO_2/kWh*

Batterysystem η_{tot}=75% → 0,77 kg CO_2/kWh

AGV-drive 15 kWh / Oph

Operation of the battery AGV generates about 50% CO_2 of the E-AGV

→ 50% CO_2-savings with the „German Energy Mix“!

→ additional reduction of CO_2 with the use of „green” energy

***Quelle: Infozentrum UmweltWirtschaft, Bayrisches Landesamt für Umwelt**

Public-funded research project B-AGV
Results from Field Test

- Successful integration of two battery AGVs into existing fleet.
- Both Battery-AGVs with > 7.500 operating hours each.
- Operating time with one battery > 16 h (peak operation).
- Energy consumption per operational hour 15 kWh (battery output).
- Until today > 1000 automatic battery changes.
- Battery charging time ca. 7 h.
- Keep up operation during winter time, temperatures below 0°C.
- **System is very reliable during 24/7 operation.**
- **Zero local exhaust emissions, reduced noise emissions.**

Transportation System's Total Cost of Ownership

TCO for a fleet size of 60 AGVs, includes

- Investment [+15%],
- Fuel/energy [-51%],
- Maintenance [-41%]

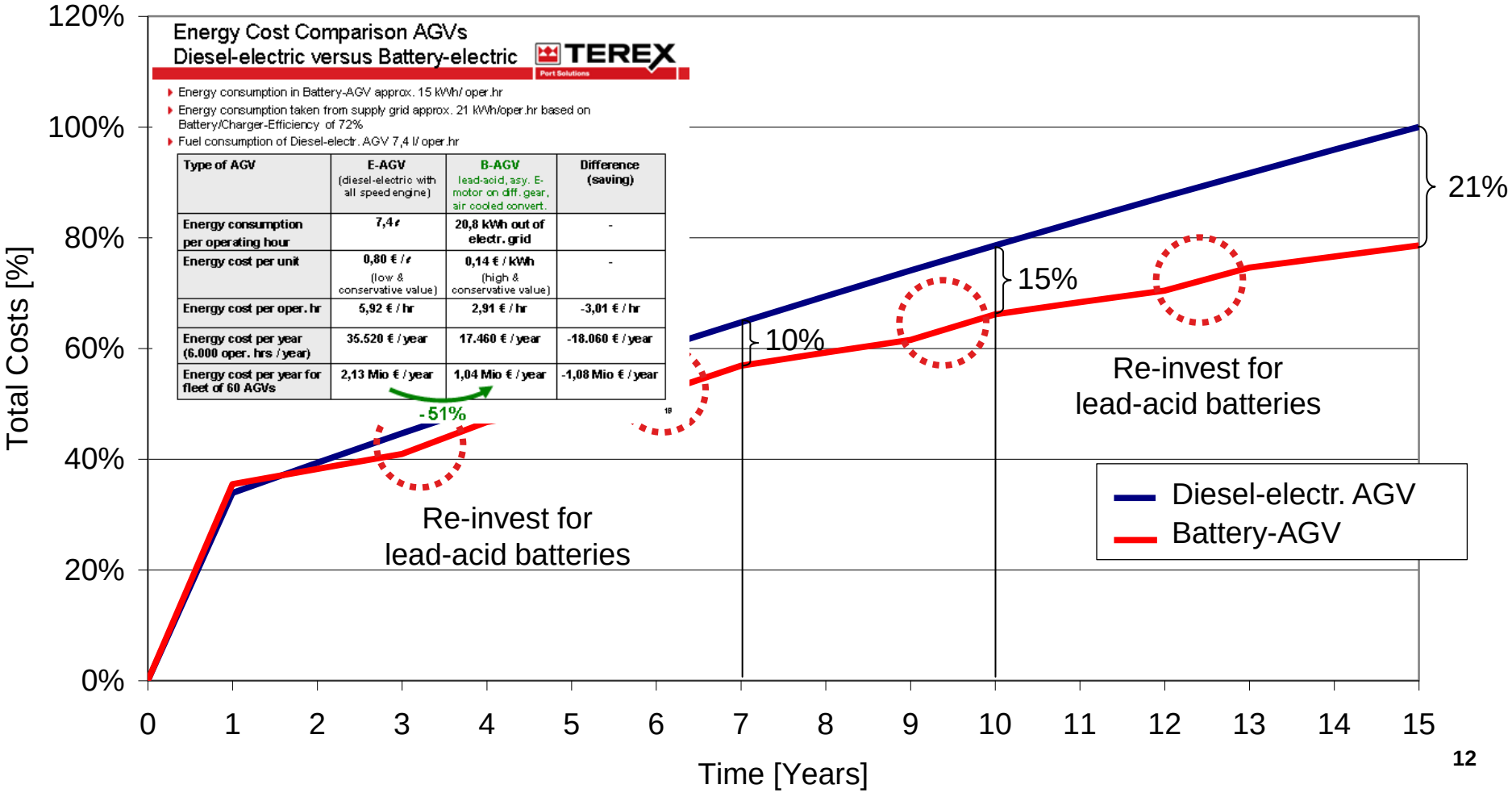

Type of AGV	E-AGV (diesel-electric with all speed engine)	B-AGV lead-acid, asy. E-motor on diff. gear, air cooled convert.	Difference (saving)
Energy consumption per operating hour	7,4 ℓ	20,8 kWh out of electr. grid	-
Energy cost per unit	0,80 € / ℓ (low & conservative value)	0,14 € / kWh (high & conservative value)	-
Energy cost per oper. hr	5,92 € / hr	2,91 € / hr	-3,01 € / hr
Energy cost per year (6.000 oper. hrs / year)	35.520 € / year	17.460 € / year	-18.060 € / year
Energy cost per year for fleet of 60 AGVs	2,13 Mio € / year	1,04 Mio € / year	-1,08 Mio € / year

Commercial Launch: Long Beach Container Terminal – Situation after 2018/2019

TEREX Port Solutions

Commercial Launch:
Maasvlakte II, Rotterdam

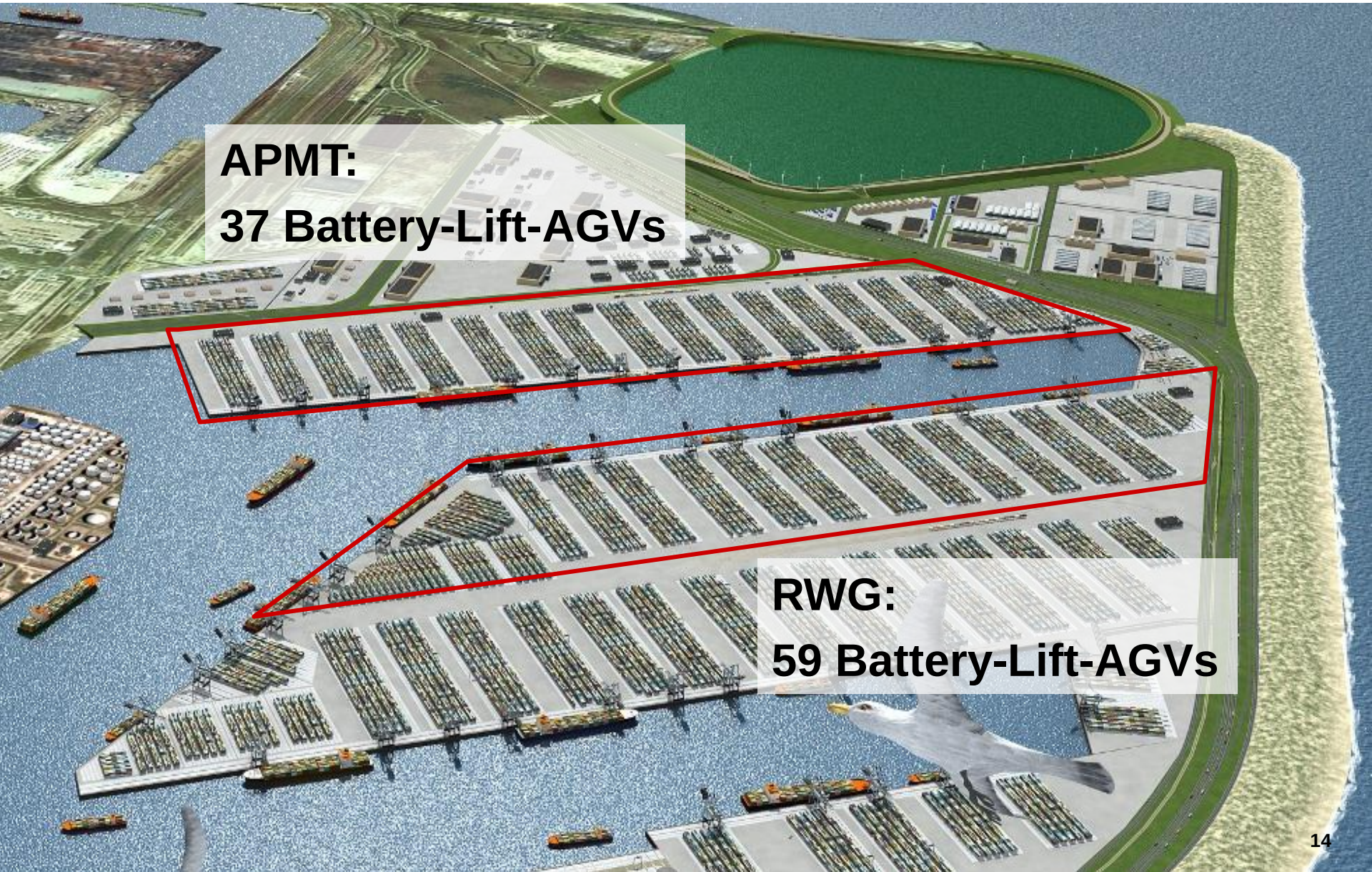

Commercial Launch:
Maasvlakte II, Rotterdam

- Due to 24/7 operation the fleet of 96 AGVs can be compared to a fleet of more than 3.000 passenger cars (~ same operational parameters (diesel consumption etc.)).
- This means that:
  - **Establishing a fleet of 96 Battery-AGVs is equal to a fleet of 3000 electric passenger cars** (Netherlands 05.2012: 1750 electric cars).
  - Global CO2-Emission are reduced by than ~7000tons/year with 96 B-AGVs compared to 96 Diesel AGVs.

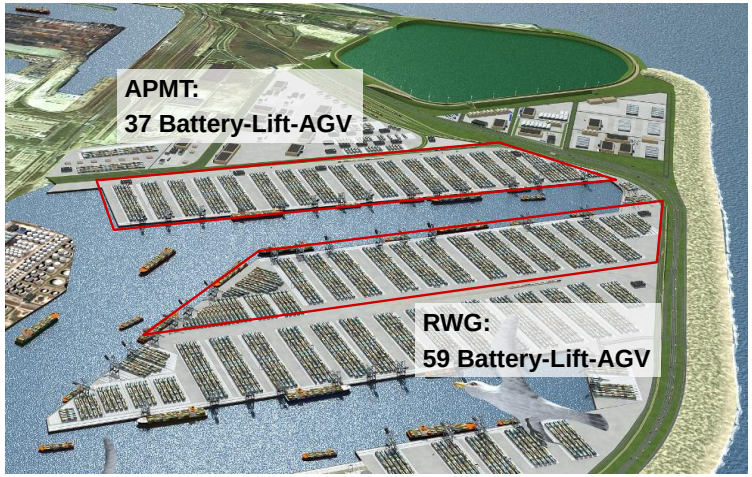

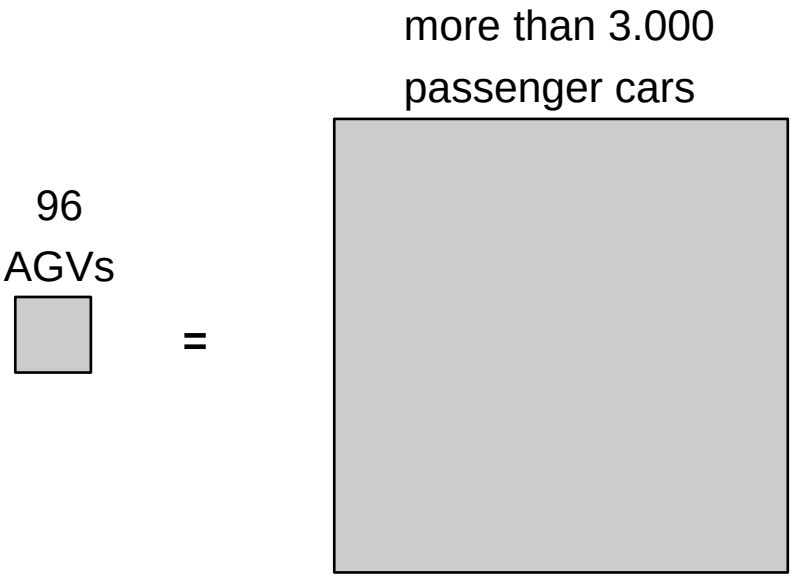

What`s next?

TEREX Port Solutions

Government-funded research project BESIC

(BESIC: Battery-Electric Heavy-Duty Vehicles in Intelligent Container-Terminals)

BESIC

- Increased B-AGV fleet
- Battery Charging and Energy Management
- Test of Lithium-Ion Batteries

- 01.01.2013 – 31.12.2015

- Partners: HHLA, VATTENFALL, efzn, TEREX Port Solutions

Battery Charging and Energy Management

Operating figures from energy supply layer

Battery Charging and Energy Management

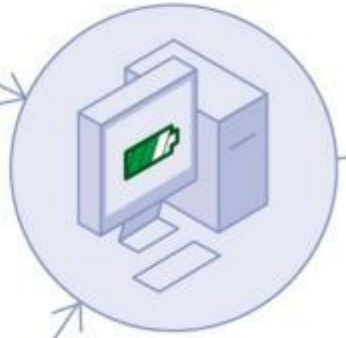

“Intelligent” Battery Charging & Changing

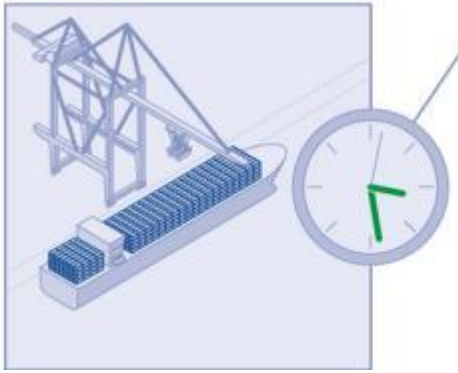

Operational Requirements

- Batteries will be charged when
  - required for operation.
  - a surplus of („green“) energy is available.
- Advantages:
  - Energy peak shaving.
  - Increased use of „green“ energy.
  - Reduced energy costs.
- Batteries as part of a smart grid.

Selection of Battery-Type – Current Status

	Lithium		Lead-Acid	
Maturity of Battery	↓	has to „customized“	↑	proven, fork lift battery
Maturity of Charger	↓	not available?	↑	proven
Load Cycles	↑?	~4x more cycles promised	→	~1200 cycles
Complexity	↓	(multiple) BMS required	↑	„plug & play“
Spec. Energy (Wh/kg)	↑	~3,5x higher	→	
Spec. Power (W/kg)	↑	~2x higher	→	
Recharge Time	↑	*~5x faster	→	*
Durability (shocks etc.)	?	has to be tested	↑	successful field tests
Costs - Invest	↓	>10x lead-acid (battery sys)	↑	
Costs - Operation	↑?	better efficiency promised	→	lower cost than diesel
Costs - Maintenance	↑?	maintenance free?	→	refill of water etc.
Recycling	?	to be developed	↑	99% recycling rate

* Recharge: Lithium-Batteries can be recharged much faster, but recharge time might be limited by equipment (e.g. cables – high currents!). Furthermore the whole charging concept has to be compared (e.g. battery exchange vs. loading battery in vehicle).

Vision – Full Electric Terminals

Straddle Carrier Layout	RTG + Terminal Truck Layout	RMG/ASC + low Straddle Carrier (Sprinter/Shuttle/Runner) Layout	RTG + AGV Layout	RMG/ASC + AGV Layout
				
Quay Gantry (QC)				
electrified	**electrified**	**electrified**	**electrified**	**electrified**
Transport System				
diesel electric	**diesel mechanic**	**diesel electric**	**diesel electric** **battery electric**	**diesel electric** **battery electric**
Storage System				
diesel electric	**diesel electric**	**electrified**	**diesel electric**	**diesel electric** **electrified**
Landside (Rail/Truck)				
partly electrified	**partly electrified**	**partly electrified**	**partly electrified**	**partly electrified**

Back-up

Lift-AGV for Decoupling Stack and Transportation in Container-Handling

- AGVs are equipped with a lift platform.
- AGV will deposit containers on racks, does not have to wait for crane.
- Racks will be installed at stack.

- To decouple the interconnected handling systems.
- **To reduce the number of vehicles (costs) or to improve the performance of the transportation system.**
- To improve the stacking system performance.